

www.cat-cnc.com

Sheet metal cutting machines

Fiber laser



Fiber laser

Full range CNC fiber laser cutting machines to meet high demands, provide precision, productivity and excellent performance

- 4 main models
- Advanced technology
- Excellent performance
- Maximum reliability
- Up to 30kW laser power
- Straight and bevel cutting

CAT CNC

Fiber laser overview



IXO

IXO is an open-table fiber laser cutting machine developed for manufacturers that value accessibility, straightforward operation, and efficient sheet-metal processing. Its open design provides direct access to the cutting table, making loading, unloading, part removal, and everyday machine operation simple and practical.
Designed for workshops with varied production requirements, IXO is well suited for individual components, short batches, prototypes, and regular production work. It offers a dependable route into fiber laser cutting for companies that want professional cutting capability without the complexity of a fully automated system.



NOVA

NOVA brings accurate and reliable fiber laser cutting into a compact, fully enclosed machine platform. It is developed for manufacturers that require professional cutting performance, enhanced operator safety, and efficient everyday production without occupying unnecessary workshop floor space.
The machine is suitable for processing standard-format sheets and delivers clean, precise results in mild steel, stainless steel, aluminium, copper, brass, and other compatible metals. From individual components and prototypes to short production runs and regular workshop orders, NOVA gives manufacturers the flexibility to complete more cutting work in-house and respond quickly to changing customer requirements.



EON

EON is a heavy-duty gantry-type fiber laser cutting machine developed for large sheets, oversized components, and demanding industrial applications.
Its open, modular architecture provides a generous working area and excellent accessibility, making it ideal for manufacturers processing large-format plates or components that cannot be handled on conventional enclosed machines.
With laser power configurations available up to 60 kW, EON delivers the cutting capacity required for medium and thick materials while maintaining high productivity and consistent part quality. The machine is designed for companies that need greater processing flexibility, larger cutting dimensions, and reliable performance in intensive production environments.



MASTER

MASTER is a fully enclosed fiber laser cutting machine developed for manufacturers that require higher output, reliable cutting quality, and efficient sheet handling. Its automatic exchange table reduces non-productive time by allowing the next sheet to be loaded and prepared while cutting continues inside the machine.
Designed for professional 2D sheet-metal processing, MASTER delivers clean, accurate cuts across a wide range of materials and applications. It is well suited for companies looking to increase internal production capacity, shorten turnaround times, and maintain consistent performance throughout daily or multi-shift operation.

CAT CNC

Fiber laser

Technical specification

Model	IXO	NOVA	EON	MASTER
Type	Open table	Enclosed / pull out table	Gantry enclosed	Enclosed / automatic dual table
Min work width mm	1500	1500	1500	1500
Max work width mm	2000	1500	2500	2000
Min work length mm	3000	3000	4000	3000
Max work length mm	6000	3000	12000	6000
Number of cutting heads	1	1	1	1
CNC control unit	HC8000B	HC8000B	HC8000B	HC8000B
Type of laser head	BLT	BLT	BLT	BLT
Min laser power	1000 W	1000 W	1000 W	1000 W
Max laser power	6000 W	12000 W	30000 W	30000 W
Autofocus	yes	yes	yes	yes
Fly cut	yes	yes	yes	yes
Defilm	yes	yes	yes	yes
Technology database	yes	yes	yes	yes
Max dry run speed	100 m/min	80 m/min	100 m/min	150 m/min
Precision	+/-0,1 mm	+/-0,1 mm	+/-0,1 mm	+/-0,1 mm
Nozzle cleaning	no	yes	yes	yes
Automatic calibration	yes	yes	yes	yes
Bevel cutting	no	no	optional	optional

Highlited features

Laser head enclosure

To ensure the operator safety IXO model is equipped with unique design laser head encloser, providing safety and keeping open table design for easy operation and material handeling



Pull out table

NOVA fiber laser incorporates manual pull out table which enables the operator easy and straightforward material handling. Automatic, motorized table is available as option.



Advanced and reliable CNC control

HC8000B fiber laser dedicated CNC control unit provides fully automated machine control and advanced operation including extensive material technogy tables, online diagnostic and supervision of all machine equipment

Remote diagnostic

Remote diagnostic and troubleshooting is available for full range of CAT CNC fiber laser cutting machines. Highly professional support, onsite and online training both for machine operation and maintenance



State of the art laser head

BLT series laser heads - advanced, reliable solution with long lifetime provide excellent cutting results. As part of system integration complete head status is easy to monitor through CNC interface

CAT CNC

IXO Fiber laser

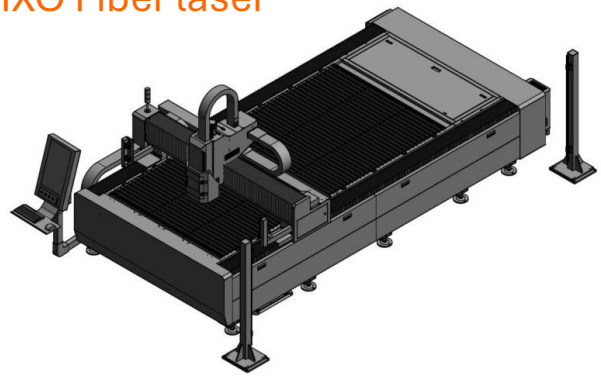

NOVA Fiber laser

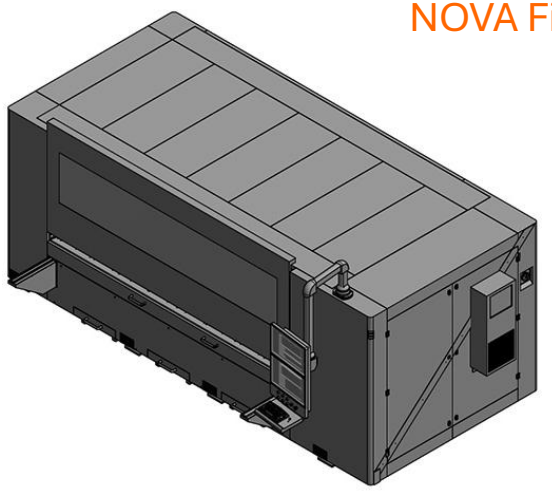

EON Fiber laser

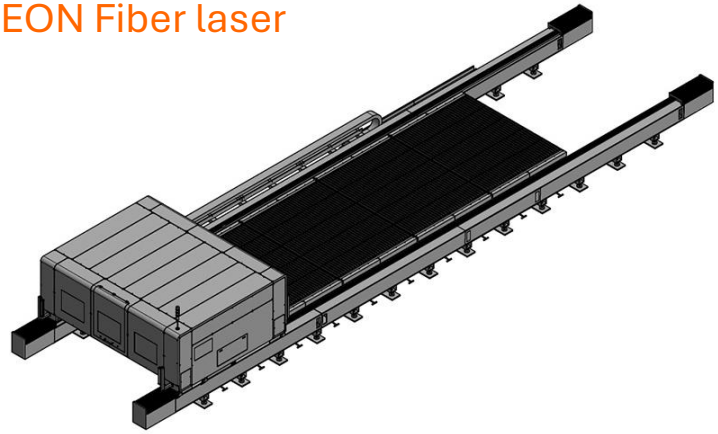

MASTER Fiber laser

